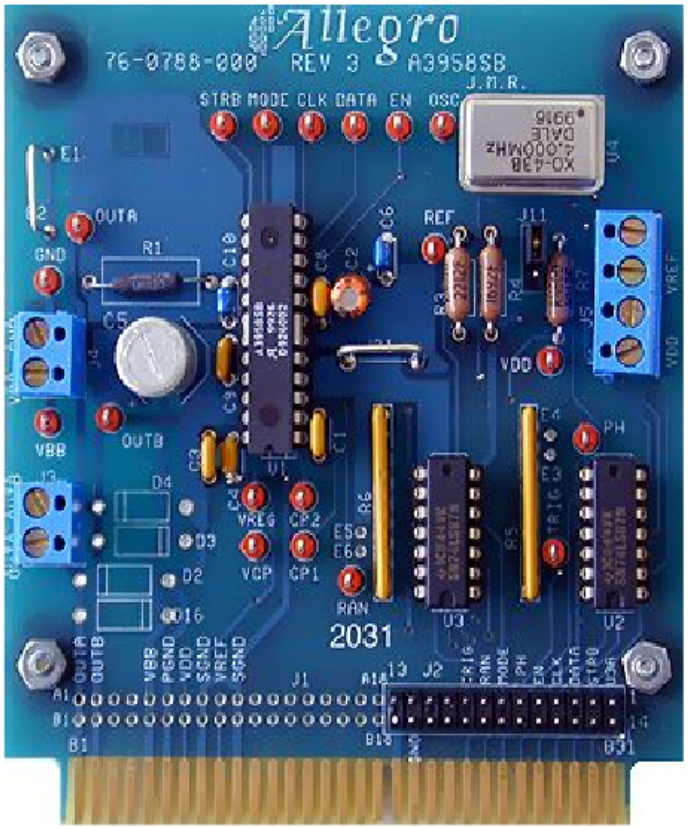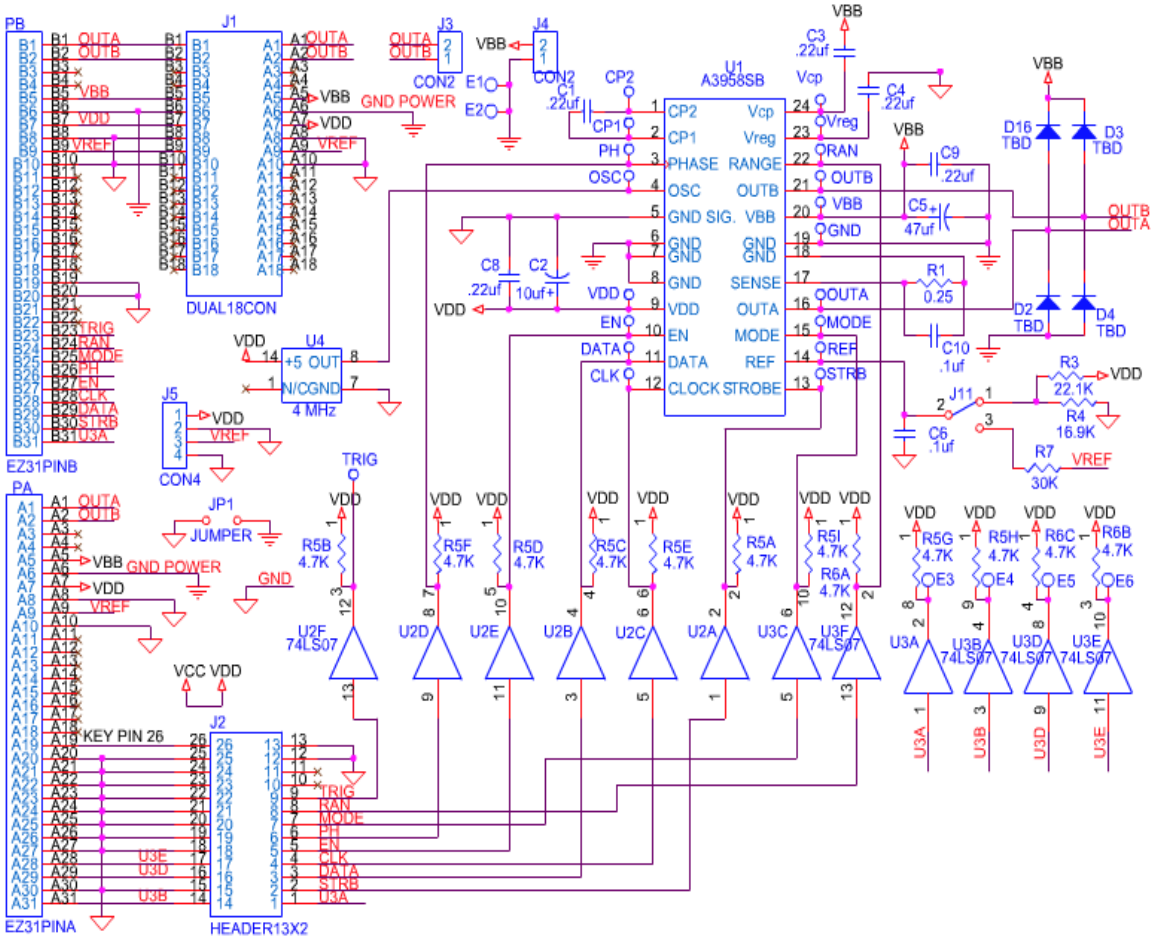A3958SB
Interactive Demo Board